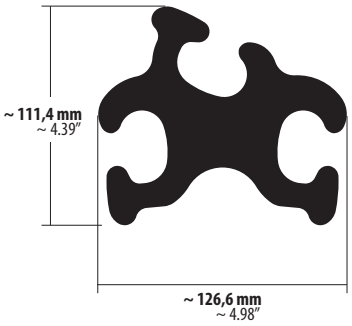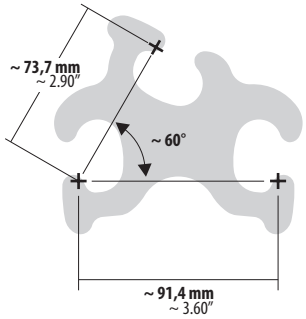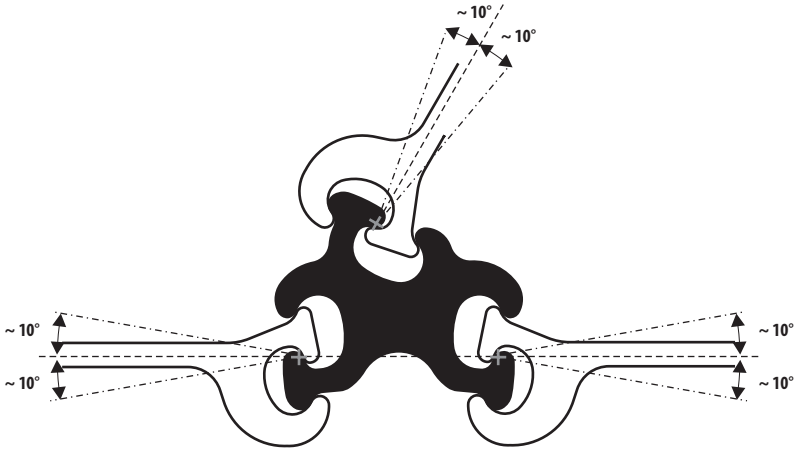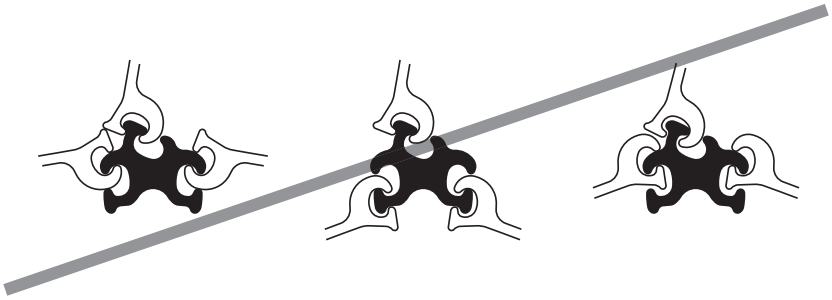SWC 60 B